DATA SHEET

Automatic Transfer Switch Box

3PH_SMA_1ST6_X_2SB5_BBDAP_20KW_1PH_PREP_DACH_1.4 Art.No. 10012945

Designation	Automatic Transfer Switch Box 1PH
Application	Battery backup function - SMA Flexible Storage System
Region	Germany - Austria - Switzerland
Battery-Inverter	1 x Sunny Boy Storage 3.7/5.0/6.0
PV-Inverter	2 x Sunny Boy 3.0/3.6/4.0/5.0/6.0
Monitoring & Control	▪ integrated SMA - Backup Controller ▪ prepared fpr retrofitting a SMA - Energy Meter or Home Manager 2.0
Grid Structure	Three phase - 3PH 230/400V - TT or TN-S system

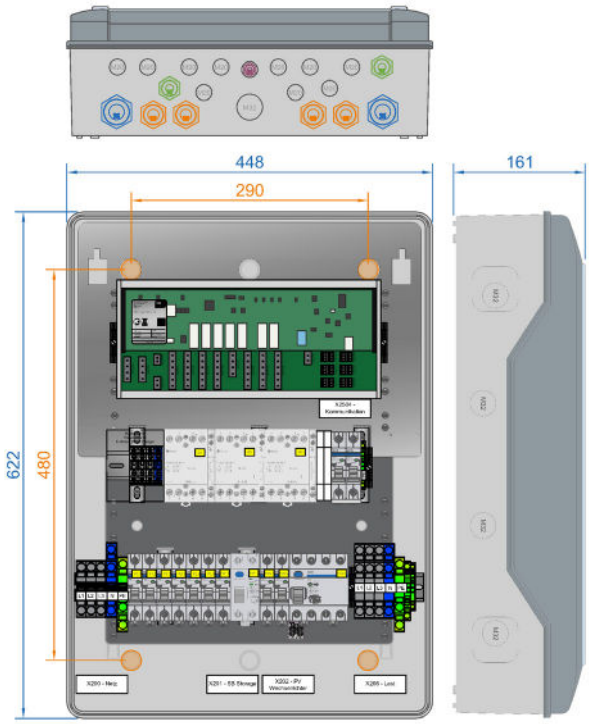

Alle values in [mm]
Dimensions „blau“
Fastening points „orange“

Minimum distances

top	300
bottom	300
lateral	200
front	800

SCOPE OF DELIVERY

Quantity	Designation
1	Automatic Transfert Switch Box
2	Cable gland M40
2	Cable gland M32
4	Cable gland M25
3	Cable gland M20
2	Enlargement adaptor -M20 to M25-
1	Reduction adaptor -M20 to M12- (pressure equalisation valve)
2	Locknut 32
4	Locknut 25
3	Locknut 20

Quantity	Designation
1	Special sealing insert (CAT 5 cable „RJ45-contactor“-M25-)
1	Preassure equalisation valve
1	Cover caps for fastening screws
1	N-supply terminal 3-fold (mounted on the RCD)
1	Communication plug (plugged into the backup controller - X2504)
1	Warning label “high voltage“
1	Label - image „with reference to an island mode system ability“
1	Installation instructions
1	Wiring diagram (DIN A3 printout)
1	Circuit diagram (DIN A3 printout)

enwitec electronic GmbH
Scherrwies 2 | 84329 Wurmannsquick | Tel. +49 8725 9664-0
Mail info@enwitec.eu | www.enwitec.eu

Status: March 2022

The text and illustrations correspond to the technical status at the time of printing, subject to change without notice. Despite careful editing, all information is without guarantee. Liability is excluded.
© enwitec electronic GmbH

CIRCUITRY OVERVIEW

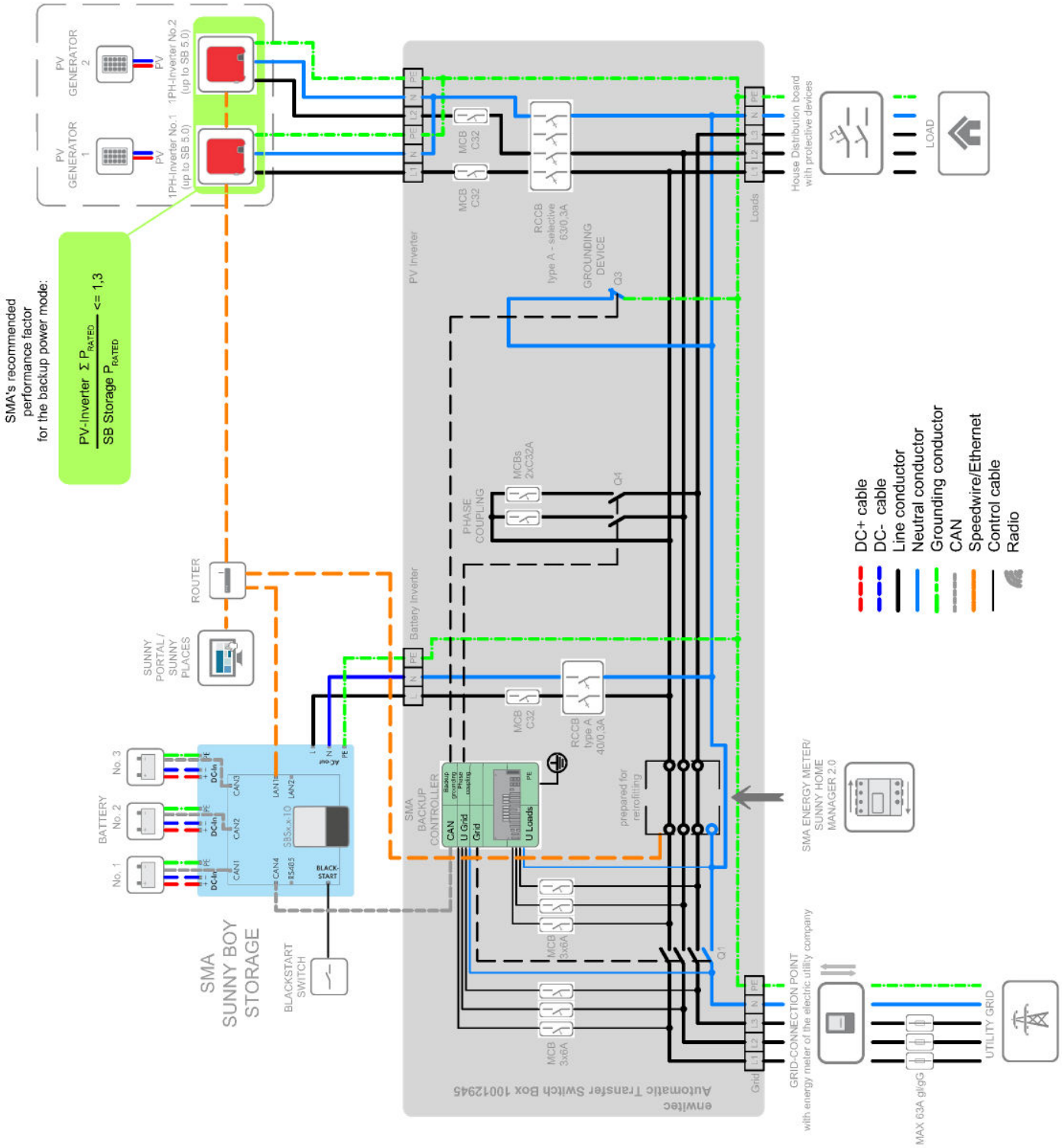

The text and illustrations correspond to the technical status at the time of printing, subject to change without notice. Despite careful editing, all information is without guarantee. Liability is excluded.

© enwitec electronic GmbH

POSSIBLE COMBINATIONS OF PV INVERTERS

For stable backup power operation, the ratio of the Sunny Boy Storage to the installed PV inverter power must be observed.
PV inverter power must be taken into account!

SMA's recommended performance factor for the backup power mode:

$$\frac{\text{PV-Inverter } \Sigma P_{RATED}}{\text{SB Storage } P_{RATED}} \leq 1{,}3$$

This ratio can also be higher. The following influencing variables play a role here:

- Local output situation/PV irradiation or weather (installed PV inverter output does not always correspond to the PV output power)
- Active power setting limited by country specification on the PV inverter (e.g. 4.6KVA according to VDE-AR-N 4105)
- State of charge of the battery (if the battery is fully charged, it can absorb less surplus PV energy).
- Behaviour of the connected consumer loads (large load changes can impair the affect the stability of the backup current).

For example, it is also possible to use a Sunny Boy Storage 3.7 with a Sunny Boy 5.0 or a Sunny Boy Storage 5.0 with two Sunny Boy 5.0 in the backup power system. However, in the case of large load jumps, short-term interruptions in the backup power system may then occur.

The text and illustrations correspond to the technical status at the time of printing, subject to change without notice. Despite careful editing, all information is without guarantee. Liability is excluded.
© enwitec electronic GmbH

CABLE ENTRY AND CONNECTIONS

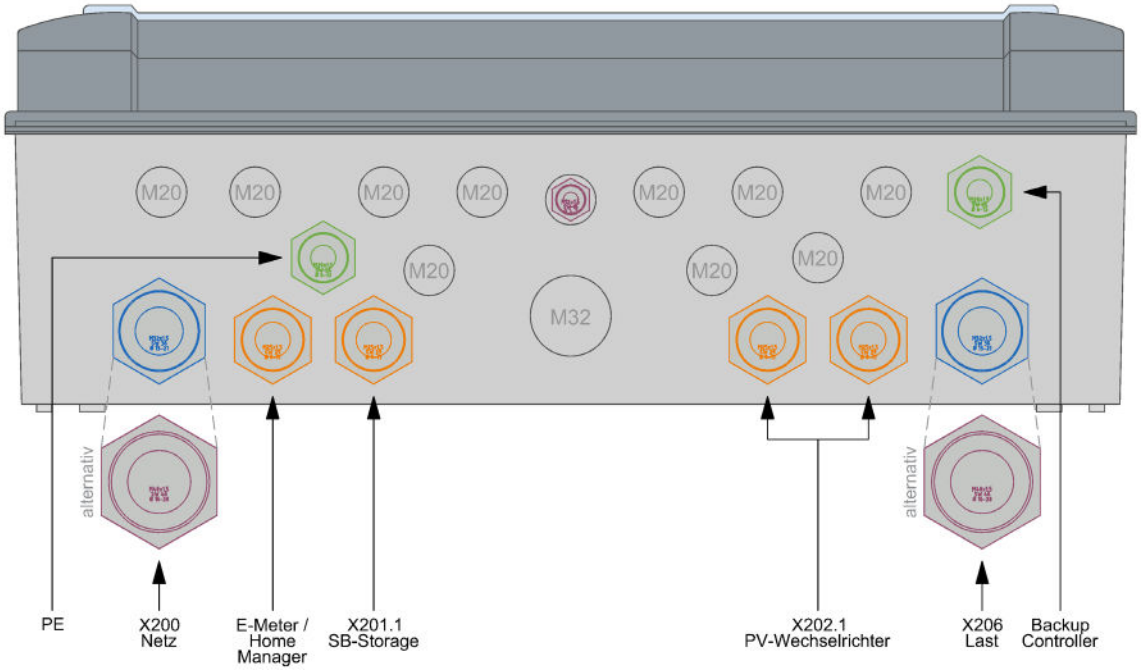

Cable gland	Terminal block	Clamping range [mm]	Wire type	Cross section max. [mm²]	Stripping length [mm]	Wire-end sleeve
M32 M40	X200 - Grid	13 - 21 16 - 28	solid stranded stranded	16 25 16	18 - 20	- - ✓
M32 M40	X206 - Load	13 - 21 16 - 28	solid stranded stranded	16 25 16	18 - 20	- - ✓
M25	X201 - SB Storage	9 - 17	solid stranded stranded	10 10 6	13 - 15	- - ✓
M25	X202 - PV inverter	9 - 17	solid stranded stranded	10 10 6	13 - 15	- - ✓
M25	E-Meter / Home Manager	special sealing insert for RJ45 connector	-	-	-	-
M20	X2504 - Communication	6-13	Communication cable according to SMA's specifications			
M20	PE	6-13	solid stranded stranded	16 25 16	18 - 20	- - ✓

The text and illustrations correspond to the technical status at the time of printing, subject to change without notice. Despite careful editing, all information is without guarantee. Liability is excluded.
© enwitec electronic GmbH

TECHNICAL DATA

• applicable / - not applicable

NOMINAL VALUES

Rated operating voltage	[V]	3PH - 230/400
Rated insulation voltage	[V]	400
Operating frequency	[Hz]	50 ±5%
Max. prospective short circuit current	[kA]	10
Permitted grid structure		TT / TN-S
Max. value of pre-fuses gL/gG	[A]	63
Max. thermal power	[kW]	20
Standby-loss, approx.	[W]	15

CIRCUIT BREAKERS

F1.1/1.2/1.3	Backup Controller	[A]	3 x B6
F2.1/2.2/2.3	Backup Controller	[A]	3 x B6
F4.1/4.2	Phase coupling	[A]	2 x C32
F201.1	SB Storage	[A]	C32
F202.1/2	PV inverter	[A]	2 x C32

RESIDUAL CURRENT CIRCUIT BREAKERS

F201.2	SB Storage	[A]	Type A / 40 - 0,3
F202.3	PV inverter	[A]	Type A / 40 - 0,3

BATTERY BACKUP FUNCTION

Max. overload currents (effective value)		
Sunny Boy Storage SBS3.7-10 Sunny Boy Storage SBS5.0-10 Sunny Boy Storage SBS6.0-10	[A]	20 28 32
Max. Output - fault current (<200µs)	[A]	198
Voltage to ground during preparedness of short circuit current	[V]	<20
Temporary current carrying - Island Grid grounding for 5 seconds	[A]	240
Continuously current carrying - Island Grid grounding	[A]	63
Switch-off time - starting at the point of exceeding the overload current	[ms]	80
Switch-off time - starting at the point of exceeding the current of 55A Peak (= short circuit)	[µs]	250

CONTACTORS (IEC/EN 61095; IEC/EN60947-1; IEC 60947-5-1)

Q1	Grid disconnection	AC1 [A]	63
Q3	Grounding device	AC1 [A]	63
Q4	Phase coupling	AC1 A]	63
Control voltage		[V]	230
Hum-free		•/-	•

GENERAL DATA

Dimensions WxHxD (without cable glands)	[mm]	448 x 622 x 161
Weight, approx.	[kg]	12
Operating temperature range	[°C]	-25 ... +40
Temperature - transport/storage (24h 70°C)	[°C]	-25 ... +55
Humidity - condensing allowed	•/-	-
Humidity - permitted range	[%]	5...95
Max. altitude above sea level	[m]	2000
Protection class IP (EN 60529)		65
Outdoor suitability (protected area)	•/-	-
Installation type		Indoor area
Protection against electric shock (EN 61140)		II
Case material		Polycarbonate
RoHS-conformity (2011/65/EU)	•/-	•
Case colour		RAL7035
Cover		transparent
Mounting method		Wall mounting
Locking system		hinged door

MISCELLANEOUS

Customs tariff number	85371098
SMA Backup Controller - spare part number	10012490

The text and illustrations correspond to the technical status at the time of printing, subject to change without notice. Despite careful editing, all information is without guarantee. Liability is excluded.
© enwitec electronic GmbH

EC DECLARATION OF CONFORMITY

The product,	designation:	**3PH_SMA_1ST6_X_2SB5_BBDAP_20KW_1PH_PREP_DACH_1.4**
	article number:	**10012945**
	manufacturer:	**enwitec electronic GmbH** **Scherrwies 2** **84329 Rogglfing**
	description:	**Automatic Transfer Switch Box for the SMA Flexible Storage System**

to which this declaration relates, is in conformity to the following standards or normative documents:

EN 61439-1	**Low-voltage switchgear and controlgear assemblies**
EN 61439-2	**Power switchgear and controlgear assemblies**
EN 61439-3	**Distribution boards intended to be operated by ordinary persons (DBO)**
VDE-AR-E 2510-2	**Stationary electrical energy storage systems intended for connection to the low voltage grid**

and is in accordance with the provisions of the following EC-directives:

Low-voltage directive 2014/35/EU

Restriction of Hazardous Substances Directive 2011/65/EU (RoHS)

Year of affixing CE-marking: **2018**

Date of issue: **04.07.2018**

enwitec electronic GmbH

Name / Signature

Johann Wimmer
CEO

The text and illustrations correspond to the technical status at the time of printing, subject to change without notice. Despite careful editing, all information is without guarantee. Liability is excluded.
© enwitec electronic GmbH